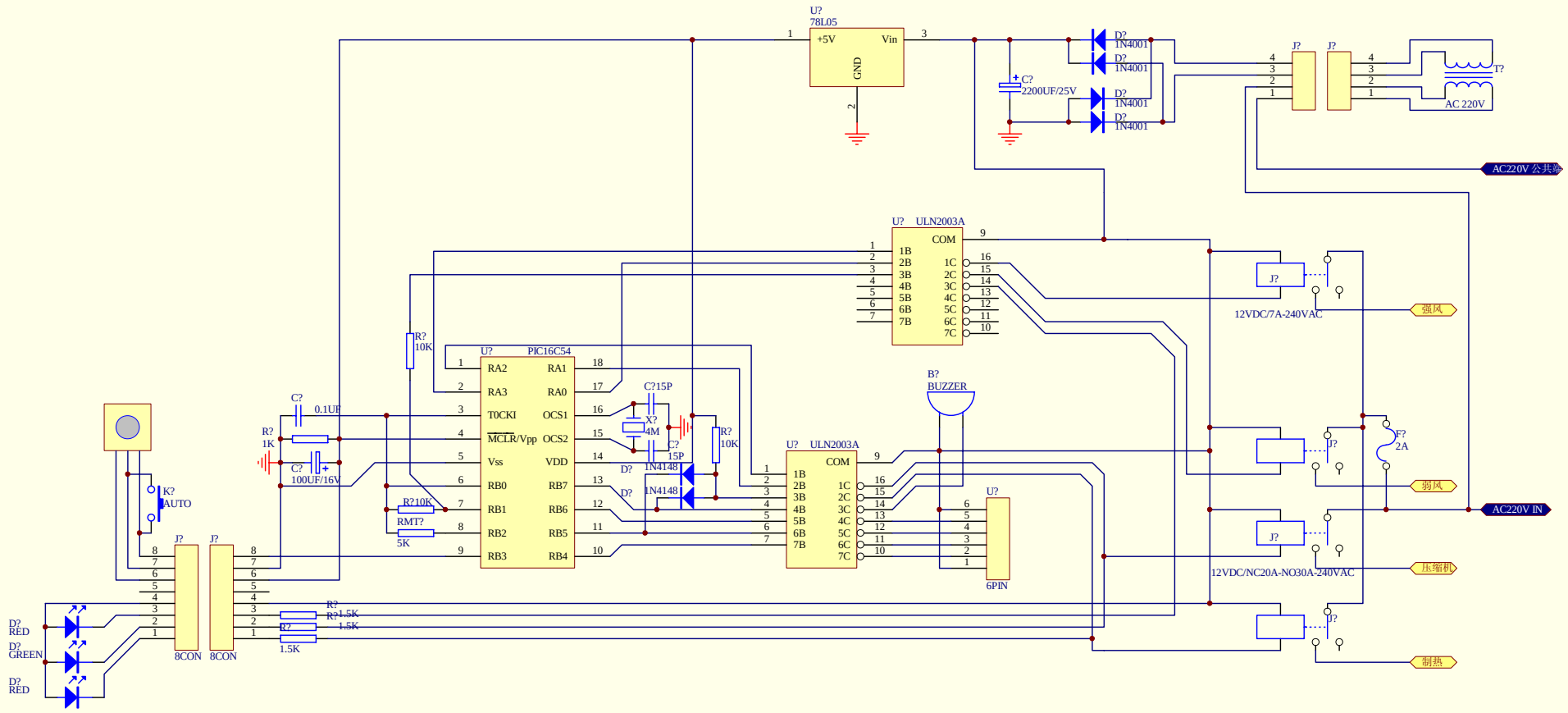

Title		
www.mcusky.com		
Size B	Number	Revision
Date: 10-Oct-2004		Sheet of
File: D:\prog\...\C0141V20.sch		Drawn By: