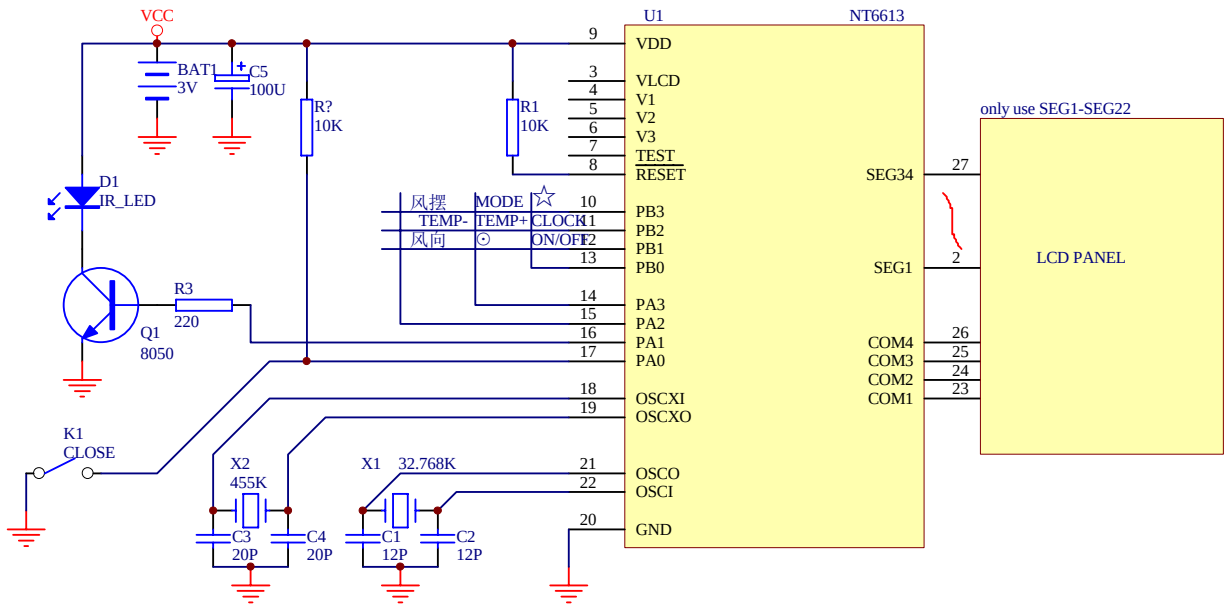

Title		
Size A4	Number	Revision
Date: 10-Oct-2004	Sheet of	
File: D:\prog\..\JZ0004.Sch	Drawn By:	